AF technology
Benefits

Reliable in all networks

The electronic system within the AF contactor rectifies the AC or DC control circuit voltage to a DC control voltage that is applied on the coil. The contactor is safely operated in an always optimized condition making it virtually noise free.

Four coils for the entire voltage range

The AF contactor features both AC and DC support. With the complete AF contactor range, functionality is improved. Still, the total number of product variants compared to a conventional range is reduced by 90%. Only four coils are required to cover 24 V AC, 20 V DC - 500 V AC/DC.

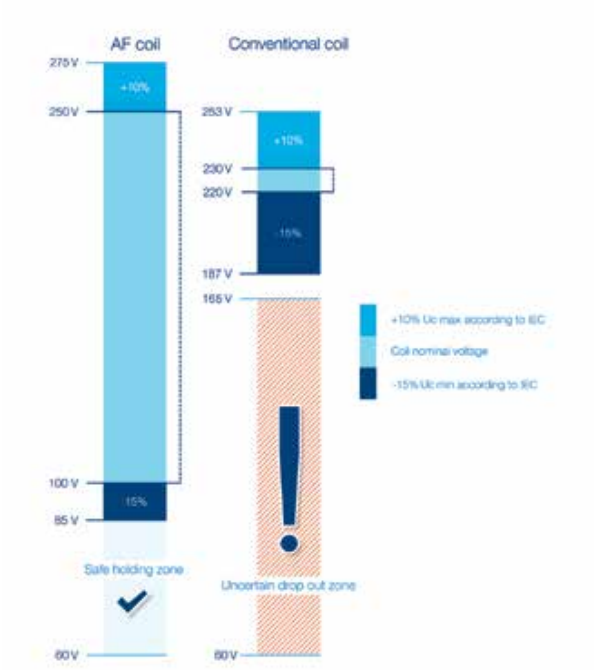

Wide control voltage range

With conventional contactor technology, different contactors were needed for different network voltages. Thanks to the wide operating range of the AF contactor it can operate just as well in Europe as in Asia or North America. The core coil of the AF contactor range covers 100-250 V AC/DC 50/60 Hz.

Built-in surge suppression

With conventional contactor technology it is recommended to use an external surge suppressor, an accessory that could cost as much as half the contactor itself. With the AF technology the surges are handled by the contactor itself and the surge never reaches the control circuit. Neither the surge suppressor nor the actual surge has to be considered anymore. One less product and one less complication to worry about.

AF09 ... AF38 3-pole contactors
5 to 20 hp at 480 V AC
AC / DC operated

AF09-30-10

AF26-30-00

Description

AF09 ... AF38 contactors are mainly used for controlling 3-phase motors and power circuits up to 690 V AC and 220 V DC. These contactors are of the block type design with 3 main poles.

- control circuit: AC or DC operated with electronic coil interface accepting a wide control voltage range (e.g. 100...250 V AC and DC), only 4 control voltage ranges covering 24...500V 50/60 Hz and 20...500 V DC
  - can manage large control voltage variations
  - reduced panel energy consumption
  - very distinct closing and opening.
- built-in surge suppression
- add-on auxiliary contact blocks for front or side mounting and a wide range of accessories.

Ordering details

IEC Rated operational power 400 V AC-3 kW	IEC Rated operational current θ ≤ 40 °C AC-1 A	UL/CSA 3-phase motor rating 480 V hp	UL/CSA General use rating 600 V AC A	Rated control circuit voltage Uc min. ... Uc max. V 50/60 Hz	Rated control circuit voltage Uc min. ... Uc max. V DC	Auxiliary contacts fitted		Catalog number	Global reference code	Weight Pkg (1 pce) kg
4	25	5	25	24...60	- (1)	1	0	AF09-30-10-41	1SBL137001R4110	0.270
						0	1	AF09-30-01-41	1SBL137001R4101	0.270
				48...130	48...130	1	0	AF09-30-10-12	1SBL137001R1210	0.270
						0	1	AF09-30-01-12	1SBL137001R1201	0.270
				100...250	100...250	1	0	AF09-30-10-13	1SBL137001R1310	0.270
						0	1	AF09-30-01-13	1SBL137001R1301	0.270
				250...500	250...500	1	0	AF09-30-10-14	1SBL137001R1410	0.310
						0	1	AF09-30-01-14	1SBL137001R1401	0.310
5.5	28	7.5	28	24...60	- (1)	1	0	AF12-30-10-41	1SBL157001R4110	0.270
						0	1	AF12-30-01-41	1SBL157001R4101	0.270
				48...130	48...130	1	0	AF12-30-10-12	1SBL157001R1210	0.270
						0	1	AF12-30-01-12	1SBL157001R1201	0.270
				100...250	100...250	1	0	AF12-30-10-13	1SBL157001R1310	0.270
						0	1	AF12-30-01-13	1SBL157001R1301	0.270
				250...500	250...500	1	0	AF12-30-10-14	1SBL157001R1410	0.310
						0	1	AF12-30-01-14	1SBL157001R1401	0.310
7.5	30	10	30	24...60	- (1)	1	0	AF16-30-10-41	1SBL177001R4110	0.270
						0	1	AF16-30-01-41	1SBL177001R4101	0.270
				48...130	48...130	1	0	AF16-30-10-12	1SBL177001R1210	0.270
						0	1	AF16-30-01-12	1SBL177001R1201	0.270
				100...250	100...250	1	0	AF16-30-10-13	1SBL177001R1310	0.270
						0	1	AF16-30-01-13	1SBL177001R1301	0.270
				250...500	250...500	1	0	AF16-30-10-14	1SBL177001R1410	0.310
						0	1	AF16-30-01-14	1SBL177001R1401	0.310
11	45	15	45	24...60	- (1)	0	0	AF26-30-00-41	1SBL237001R4100	0.310
				48...130	48...130	0	0	AF26-30-00-12	1SBL237001R1200	0.310
				100...250	100...250	0	0	AF26-30-00-13	1SBL237001R1300	0.310
				250...500	250...500	0	0	AF26-30-00-14	1SBL237001R1400	0.350
15	50	20	50	24...60	- (1)	0	0	AF30-30-00-41	1SBL277001R4100	0.310
				48...130	48...130	0	0	AF30-30-00-12	1SBL277001R1200	0.310
				100...250	100...250	0	0	AF30-30-00-13	1SBL277001R1300	0.310
				250...500	250...500	0	0	AF30-30-00-14	1SBL277001R1400	0.350
18.5	50	20	50	24...60	- (1)	0	0	AF38-30-00-41	1SBL297001R4100	0.310
				48...130	48...130	0	0	AF38-30-00-12	1SBL297001R1200	0.310
				100...250	100...250	0	0	AF38-30-00-13	1SBL297001R1300	0.310
				250...500	250...500	0	0	AF38-30-00-14	1SBL297001R1400	0.350

(1) For 24...60 V 50/60 Hz - 20...60 V DC, use AF..-30-..-11 (see voltage code table). AF..-30-..-11 not suitable for direct control by PLC-output.

Main dimensions mm, inches

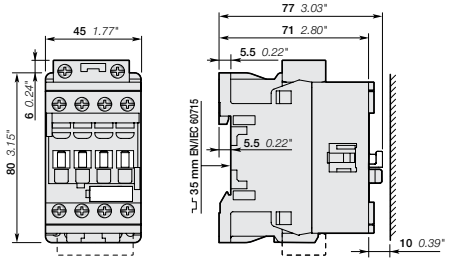

AF09, AF12, AF16

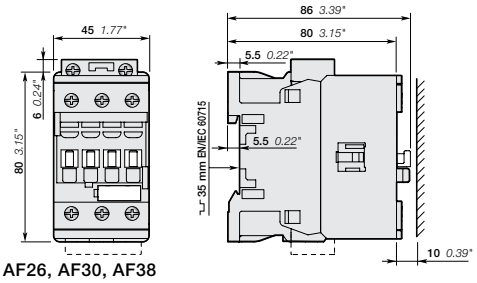

AF26, AF30, AF38

AF40 ... AF96 3-pole contactors
30 to 60 hp at 480 V AC
AC / DC operated with 1 N.O. + 1 N.C. auxiliary contacts

AF40-30-11

AF80-30-11

Description

AF40 ... AF96 contactors are mainly used for controlling 3-phase motors and power circuits up to 690 V AC and 220 V DC. These contactors are of the block type design with 3 main poles.

- control circuit: AC or DC operated with electronic coil interface accepting a wide control voltage range (e.g. 100...250 V AC and DC), only 4 control voltage ranges covering 24...500 V 50/60 Hz and 20...500 V DC
  - can manage large control voltage variations
  - reduced panel energy consumption
  - very distinct closing and opening.
- built-in surge suppression
- add-on auxiliary contact blocks for front or side mounting and a wide range of accessories.

Ordering details

IEC		UL / CSA		Rated control circuit voltage Uc min. ... Uc max.		Auxiliary contacts fitted		Catalog number	Global reference code	Weight
Rated operational power 400 V AC-3	current θ ≤ 40 °C AC-1	3-phase motor rating 480 V	General use rating 600 V AC							Pkg (1 pce)
kW	A	hp	A	V 50/60 Hz	V DC					kg
18.5	70	30	60	24...60	-	1	1	AF40-30-11-41	1SBL347001R4111	1.010
				24...60	20...60 (1)	1	1	AF40-30-11-11	1SBL347001R1111	1.010
				48...130	48...130	1	1	AF40-30-11-12	1SBL347001R1211	1.010
				100...250	100...250	1	1	AF40-30-11-13	1SBL347001R1311	1.000
				250...500	250...500	1	1	AF40-30-11-14	1SBL347001R1411	1.000
22	100	40	80	24...60	-	1	1	AF52-30-11-41	1SBL367001R4111	1.010
				24...60	20...60 (1)	1	1	AF52-30-11-11	1SBL367001R1111	1.010
				48...130	48...130	1	1	AF52-30-11-12	1SBL367001R1211	1.010
				100...250	100...250	1	1	AF52-30-11-13	1SBL367001R1311	1.000
				250...500	250...500	1	1	AF52-30-11-14	1SBL367001R1411	1.000
30	105	50	90	24...60	-	1	1	AF65-30-11-41	1SBL387001R4111	1.010
				24...60	20...60 (1)	1	1	AF65-30-11-11	1SBL387001R1111	1.010
				48...130	48...130	1	1	AF65-30-11-12	1SBL387001R1211	1.010
				100...250	100...250	1	1	AF65-30-11-13	1SBL387001R1311	1.000
				250...500	250...500	1	1	AF65-30-11-14	1SBL387001R1411	1.000
37	125	60	105	24...60	-	1	1	AF80-30-11-41	1SBL397001R4111	1.260
				24...60	20...60 (1)	1	1	AF80-30-11-11	1SBL397001R1111	1.260
				48...130	48...130	1	1	AF80-30-11-12	1SBL397001R1211	1.260
				100...250	100...250	1	1	AF80-30-11-13	1SBL397001R1311	1.210
				250...500	250...500	1	1	AF80-30-11-14	1SBL397001R1411	1.210
45	130	60	115	24...60	-	1	1	AF96-30-11-41	1SBL407001R4111	1.260
				24...60	20...60 (1)	1	1	AF96-30-11-11	1SBL407001R1111	1.260
				48...130	48...130	1	1	AF96-30-11-12	1SBL407001R1211	1.260
				100...250	100...250	1	1	AF96-30-11-13	1SBL407001R1311	1.210
				250...500	250...500	1	1	AF96-30-11-14	1SBL407001R1411	1.210

(1) AF..-30-..-11 not suitable for direct control by PLC-output.

Main dimensions mm, inches

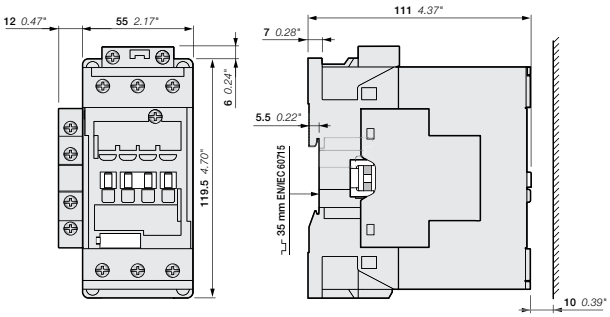

AF40, AF52, AF65

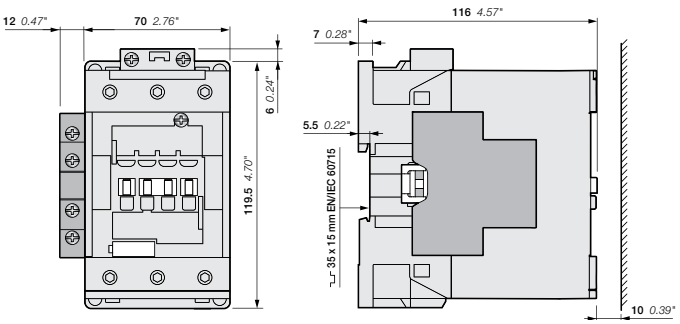

AF80, AF96

AF116 ... AF146 3-pole contactors
75 to 100 hp at 480 V AC
AC / DC operated with 1 N.O. + 1 N.C. auxiliary contacts

AF146-30-11

AF146-30-11B

Description

AF116 ... AF140 contactors are mainly used for controlling 3-phase motors and power circuits up to 690 V AC, AF146 up to 1000 V AC. These contactors are of the block type design with 3 main poles.

- Control circuit: AC or DC operated with electronic coil interface accepting a wide control voltage range (e.g. 100...250 V AC and DC), only 4 control voltage ranges covering 24...500 V 50/60 Hz and 20...500 V DC
  - can manage large control voltage variations
  - reduced panel energy consumption
  - very distinct closing and opening
  - can withstand short voltage dips and voltage sags (SEMI F47 conditions of use on request).
- built-in surge suppression
- add-on auxiliary contact blocks for side mounting and a wide range of accessories.

Ordering details

IEC		UL / CSA		Rated control circuit voltage Uc min. ... Uc max.		Auxiliary contacts fitted		Catalog number	Global reference code	Weight
Rated operational power 400 V AC-3	current θ ≤ 40 °C AC-1	3-phase motor rating 480 V	General use rating 600 V AC							Pkg (1 pce)
kW	A	hp	A	V 50/60 Hz	V DC					kg
For connection with built-in cable clamps										
55	160	75	160	24...60	20...60	1	1	AF116-30-11-11	1SFL427001R1111	1.750
				48...130	48...130	1	1	AF116-30-11-12	1SFL427001R1211	1.750
				100...250	100...250	1	1	AF116-30-11-13	1SFL427001R1311	1.750
				250...500	250...500	1	1	AF116-30-11-14	1SFL427001R1411	1.750
75	200	100	200	24...60	20...60	1	1	AF140-30-11-11	1SFL447001R1111	1.750
				48...130	48...130	1	1	AF140-30-11-12	1SFL447001R1211	1.750
				100...250	100...250	1	1	AF140-30-11-13	1SFL447001R1311	1.750
				250...500	250...500	1	1	AF140-30-11-14	1SFL447001R1411	1.750
75	225	100	200	24...60	20...60	1	1	AF146-30-11-11	1SFL467001R1111	1.750
				48...130	48...130	1	1	AF146-30-11-12	1SFL467001R1211	1.750
				100...250	100...250	1	1	AF146-30-11-13	1SFL467001R1311	1.750
				250...500	250...500	1	1	AF146-30-11-14	1SFL467001R1411	1.750
With bar connections										
55	160	75	160	24...60	20...60	1	1	AF116-30-11B-11	1SFL427002R1111	1.500
				48...130	48...130	1	1	AF116-30-11B-12	1SFL427002R1211	1.500
				100...250	100...250	1	1	AF116-30-11B-13	1SFL427002R1311	1.500
				250...500	250...500	1	1	AF116-30-11B-14	1SFL427002R1411	1.500
75	200	100	200	24...60	20...60	1	1	AF140-30-11B-11	1SFL447002R1111	1.500
				48...130	48...130	1	1	AF140-30-11B-12	1SFL447002R1211	1.500
				100...250	100...250	1	1	AF140-30-11B-13	1SFL447002R1311	1.500
				250...500	250...500	1	1	AF140-30-11B-14	1SFL447002R1411	1.500
75	225	100	200	24...60	20...60	1	1	AF146-30-11B-11	1SFL467002R1111	1.500
				48...130	48...130	1	1	AF146-30-11B-12	1SFL467002R1211	1.500
				100...250	100...250	1	1	AF146-30-11B-13	1SFL467002R1311	1.500
				250...500	250...500	1	1	AF146-30-11B-14	1SFL467002R1411	1.500

Main dimensions mm, inches

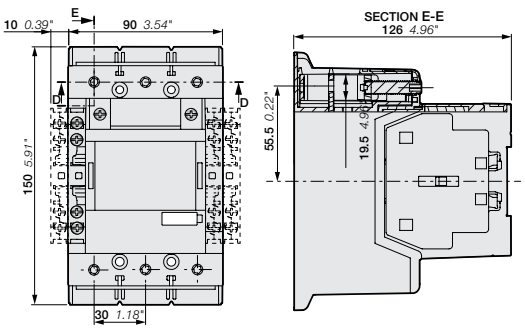

AF116, AF140, AF146-30-11

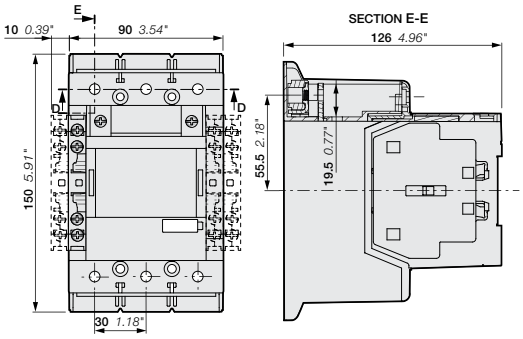

AF116, AF140, AF146-30-11B

AF190 ... AF370 3-pole contactors
125 to 300 hp at 480 V AC
AC / DC operated with 1 N.O. + 1 N.C. auxiliary contacts

AF205-30-11

AF370-30-11

Description

AF190 ... AF370 contactors are mainly used for controlling 3-phase motors and power circuits up to 1000 V AC. These contactors are of the block type design with 3 main poles.

– control circuit: AC or DC operated with electronic coil interface accepting a wide control voltage range (e.g. 100...250 V AC and DC), only 4 control voltage ranges covering 24...500 V 50/60 Hz and 20...500 V DC
  - can manage large control voltage variations
  - reduced panel energy consumption
  - very distinct closing and opening
  - can withstand short voltage dips and voltage sags (SEMI F47 conditions of use on request).

– built-in surge suppression

– add-on auxiliary contact blocks for side mounting and a wide range of accessories.

Ordering details

IEC		UL / CSA		Rated control circuit voltage Uc min. ... Uc max.		Auxiliary contacts fitted		Catalog number	Global reference code	Weight
Rated operational power 400 V AC-3	current θ ≤ 40 °C AC-1	3-phase motor rating 480 V	General use rating 600 V AC							Pkg (1 pce)
kW	A	hp	A (1)	V 50/60 Hz	V DC					kg
90	275	125	230 [250]	24...60	20...60	1	1	AF190-30-11-11	1SFL487002R1111	3.000
				48...130	48...130	1	1	AF190-30-11-12	1SFL487002R1211	3.000
				100...250	100...250	1	1	AF190-30-11-13	1SFL487002R1311	3.000
				250...500	250...500	1	1	AF190-30-11-14	1SFL487002R1411	3.000
110	350	150	250 [300]	24...60	20...60	1	1	AF205-30-11-11	1SFL527002R1111	3.000
				48...130	48...130	1	1	AF205-30-11-12	1SFL527002R1211	3.000
				100...250	100...250	1	1	AF205-30-11-13	1SFL527002R1311	3.000
				250...500	250...500	1	1	AF205-30-11-14	1SFL527002R1411	3.000
140	400	200	300 [350]	24...60	20...60	1	1	AF265-30-11-11	1SFL547002R1111	4.640
				48...130	48...130	1	1	AF265-30-11-12	1SFL547002R1211	4.640
				100...250	100...250	1	1	AF265-30-11-13	1SFL547002R1311	4.640
				250...500	250...500	1	1	AF265-30-11-14	1SFL547002R1411	4.640
160	500	250	350 [400]	24...60	20...60	1	1	AF305-30-11-11	1SFL587002R1111	4.640
				48...130	48...130	1	1	AF305-30-11-12	1SFL587002R1211	4.640
				100...250	100...250	1	1	AF305-30-11-13	1SFL587002R1311	4.640
				250...500	250...500	1	1	AF305-30-11-14	1SFL587002R1411	4.640
200	600	300	400 [520]	24...60	20...60	1	1	AF370-30-11-11	1SFL607002R1111	4.640
				48...130	48...130	1	1	AF370-30-11-12	1SFL607002R1211	4.640
				100...250	100...250	1	1	AF370-30-11-13	1SFL607002R1311	4.640
				250...500	250...500	1	1	AF370-30-11-14	1SFL607002R1411	4.640

(1) The higher ratings shown in [brackets] can be achieved through the use of LX.. terminal extensions.

Main dimensions mm, inches

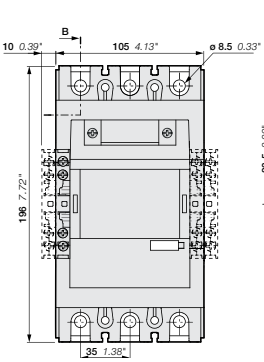

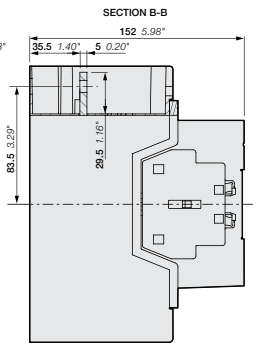

AF190, AF205

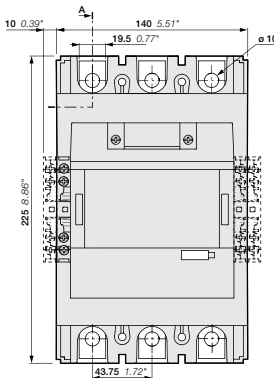

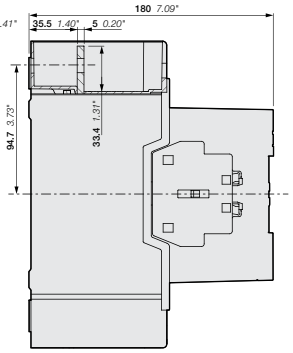

AF265, AF305, AF370

AF400 ... AF750 3-pole contactors
350 to 600 hp at 480 V AC
AC / DC operated with 1 N.O. + 1 N.C. auxiliary contacts

AF460-30-11

AF750-30-11

Description

AF400 ... AF750 contactors are mainly used for controlling 3-phase motors and power circuits up to 1000 V AC or 600 V DC (2). These contactors are of the block type design with 3 main poles.

– control circuit: AC or DC operated with electronic coil interface accepting a wide control voltage range (e.g. 100...250 V AC and DC), only 4 coils to cover control voltages between 48...500 V 50/60 Hz and 24...500 V DC
  - can manage large control voltage variations
  - reduced panel energy consumption
  - very distinct closing and opening
  - can withstand short voltage dips and voltages sags (SEMI F47 conditions of use on request).
– built-in surge suppression
– add-on auxiliary contact blocks for side mounting and a wide range of accessories.

Ordering details

IEC		UL/CSA		Rated control circuit voltage Uc min. ... Uc max.		Auxiliary contacts fitted		Catalog number	Global reference code	Weight
Rated operational power 400 V AC-3	current θ ≤ 40 °C 690 V AC-1	3-phase motor rating 480 V	General use rating 600 V AC							Pkg (1 pce)
kW	A	hp	A	V 50/60 Hz	V DC					kg
200	600	350	550	-	24...60 (1)	1	1	AF400-30-11-68	1SFL577001R6811	12.000
				48...130	48...130	1	1	AF400-30-11-69	1SFL577001R6911	12.000
				100...250	100...250	1	1	AF400-30-11-70	1SFL577001R7011	12.000
				250...500	250...500	1	1	AF400-30-11-71	1SFL577001R7111	12.000
250	700	400	650	-	24...60 (1)	1	1	AF460-30-11-68	1SFL597001R6811	12.000
				48...130	48...130	1	1	AF460-30-11-69	1SFL597001R6911	12.000
				100...250	100...250	1	1	AF460-30-11-70	1SFL597001R7011	12.000
				250...500	250...500	1	1	AF460-30-11-71	1SFL597001R7111	12.000
315	800	500	750	-	24...60 (1)	1	1	AF580-30-11-68	1SFL617001R6811	15.000
				48...130	48...130	1	1	AF580-30-11-69	1SFL617001R6911	15.000
				100...250	100...250	1	1	AF580-30-11-70	1SFL617001R7011	15.000
				250...500	250...500	1	1	AF580-30-11-71	1SFL617001R7111	15.000
400	1050	600	900	-	24...60 (1)	1	1	AF750-30-11-68	1SFL637001R6811	15.000
				48...130	48...130	1	1	AF750-30-11-69	1SFL637001R6911	15.000
				100...250	100...250	1	1	AF750-30-11-70	1SFL637001R7011	15.000
				250...500	250...500	1	1	AF750-30-11-71	1SFL637001R7111	15.000

(1) The connection polarities indicated close to the coil terminals must be respected: A1 for the positive pole and A2 for the negative pole.
(2) Up to 850 V DC for AF580, AF750.

Control inputs

AF400 ... AF750 are equipped with low voltage inputs for control, for example by a PLC.

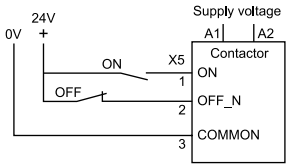

Main dimensions mm, inches

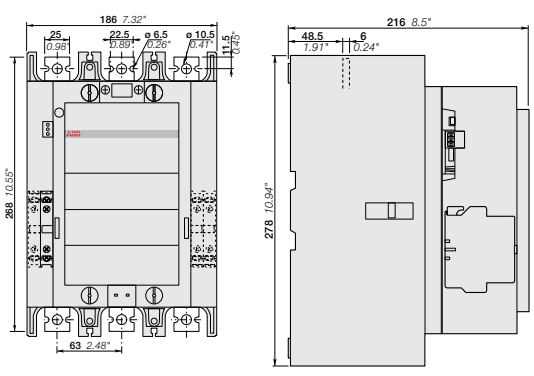

AF400, AF460

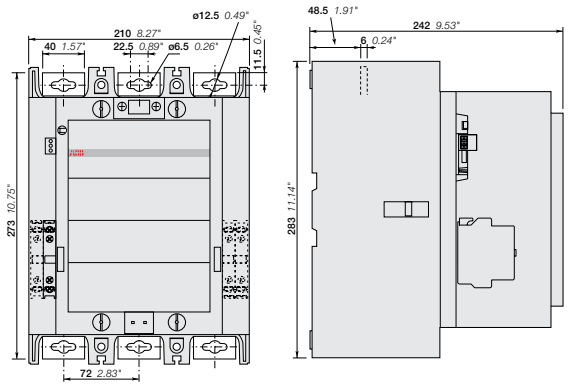

AF580, AF750

AF1250 ... AF2650 3-pole contactors

800 to 900 hp at 480 V AC and up to 2700 A general use
AC / DC operated with 1 N.O. + 1 N.C. auxiliary contacts

2

AF1250-30-11

AF2650-30-11

Description

AF1250 ... AF2050 contactors are mainly used for controlling power circuits up to 1000 V AC or 850 V DC, AF2650 for controlling power up to 1000 V AC. These contactors are of the block type design with 3 main poles.

– control circuit: AC or DC operated with electronic coil interface accepting a wide control voltage range (e.g. 100...250 V AC and DC)

- only 4 coils for AF1250 to cover control voltages between 48...500 V 50/60 Hz and 24...500 V DC
  - only 1 coil for AF1350 ... AF2650 to cover control voltages between 100...250 V 50/60 Hz and 100...250 V DC
  - can manage large control voltage variations
  - reduced panel energy consumption
  - very distinct closing and opening
  - can withstand short voltage dips and voltages sags (SEMI F47 conditions of use on request).

– built-in surge suppression

– add-on auxiliary contact blocks for side mounting and a wide range of accessories.

Ordering details

IEC		UL/CSA		Rated control circuit voltage Uc (1)		Auxiliary contacts fitted		Catalog number	Global reference code	Weight
Rated operational power 400 V AC-3	current θ ≤ 40 °C 690 V AC-1	3-phase motor rating 480 V	General use rating 600 V AC (2)							Pkg (1 pce)
kW	A	hp	A	V 50/60 Hz	V DC					kg
-	1260	-	1210	-	24...60 (1)	1	1	AF1250-30-11-68	1SFL647001R6811	16.000
				48...130	48...130	1	1	AF1250-30-11-69	1SFL647001R6911	16.000
				100...250	100...250	1	1	AF1250-30-11-70	1SFL647001R7011	16.000
				250...500	250...500	1	1	AF1250-30-11-71	1SFL647001R7111	16.000
475	1350	800	1350	100...250	100...250	1	1	AF1350-30-11-70	1SFL657001R7011	34.000
560	1650	900	1650	100...250	100...250	1	1	AF1650-30-11-70	1SFL677001R7011	35.000
-	2050	-	2100	100...250	100...250	1	1	AF2050-30-11-70	1SFL707001R7011	35.000
-	2650	-	2700	100...250	100...250	1	1	AF2650-30-11-70	1SFL667001R7011	45.000

(1) The connection polarities indicated close to the coil terminals must be respected: A1 for the positive pole and A2 for the negative pole.
(2) AF2650 : Maximum operational voltage = 1000 V according to UL / CSA.

Control inputs

AF1250 ... AF2650 are equipped with low voltage inputs for control, for example by a PLC

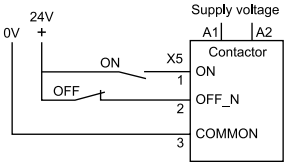

	AF1350, AF1650, AF2050	AF2650
A	392 mm / *15.43"*	422 mm / *16.61"*
B	47 mm / *1.85"*	53.5 mm / *2.11"*
C	10 mm / *0.39"*	25 mm / *0.98"*
D	3 mm / *0.12"*	-

Main dimensions mm, inches

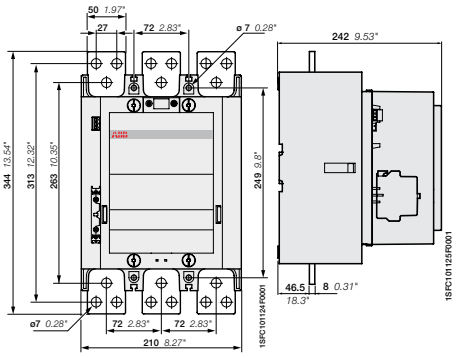

AF1250

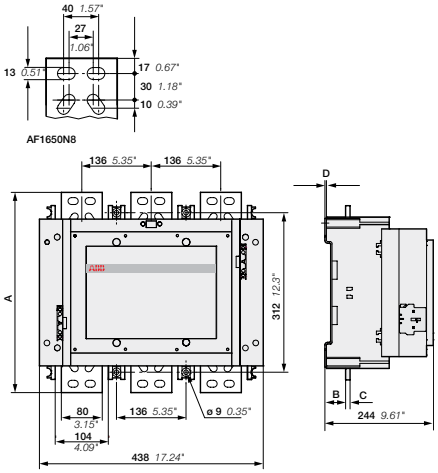

AF1350, AF1650, AF2050, AF2650